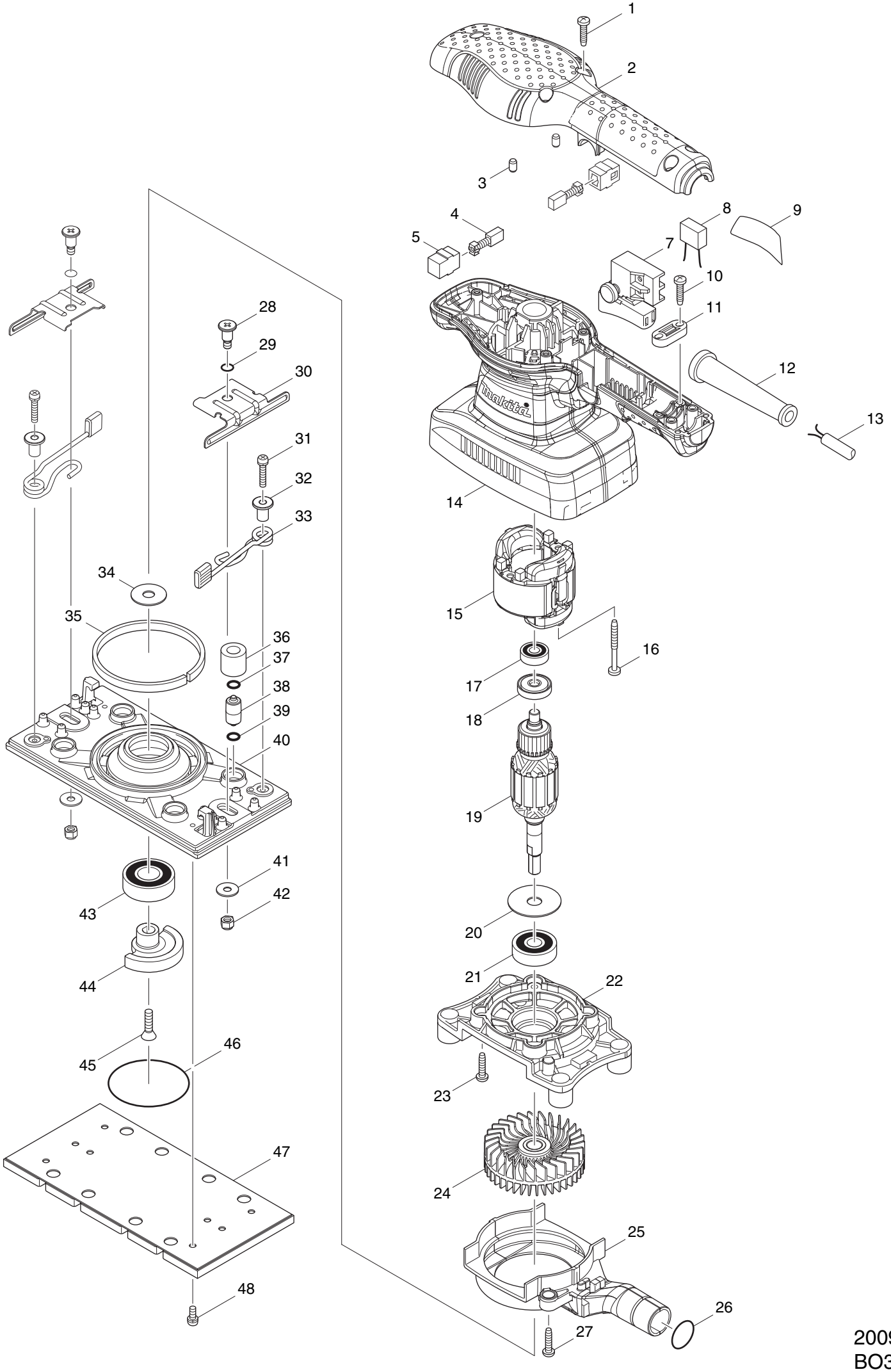

2009/03
BO3710